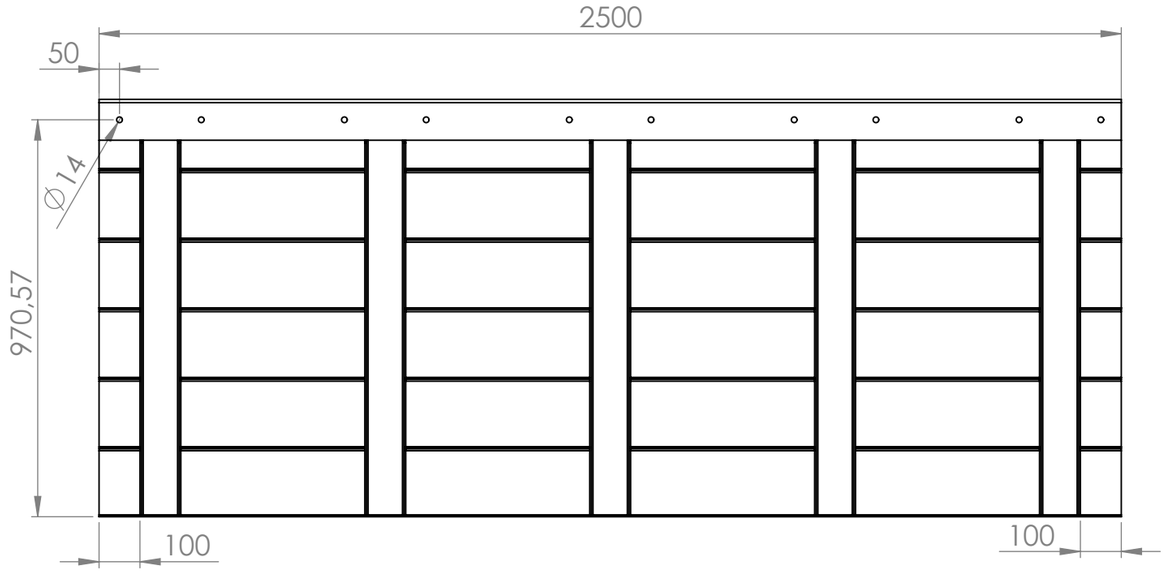

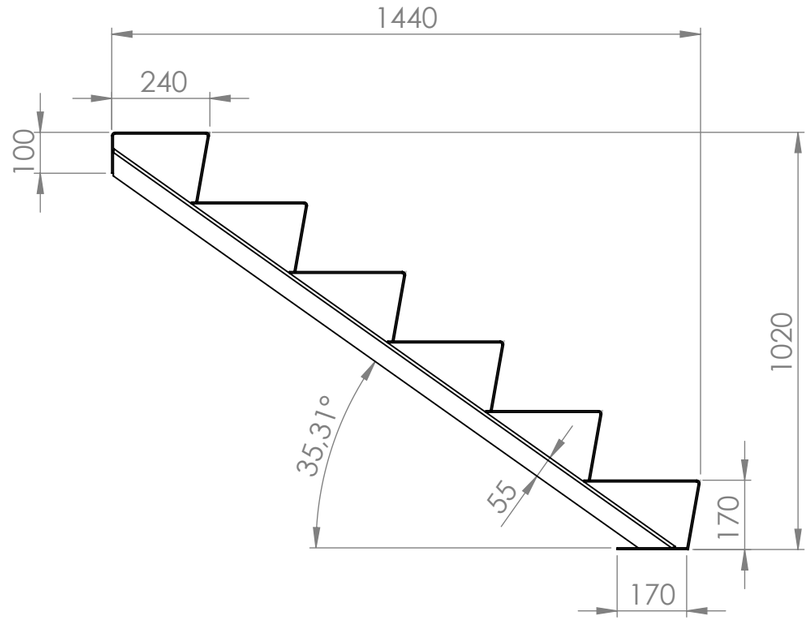

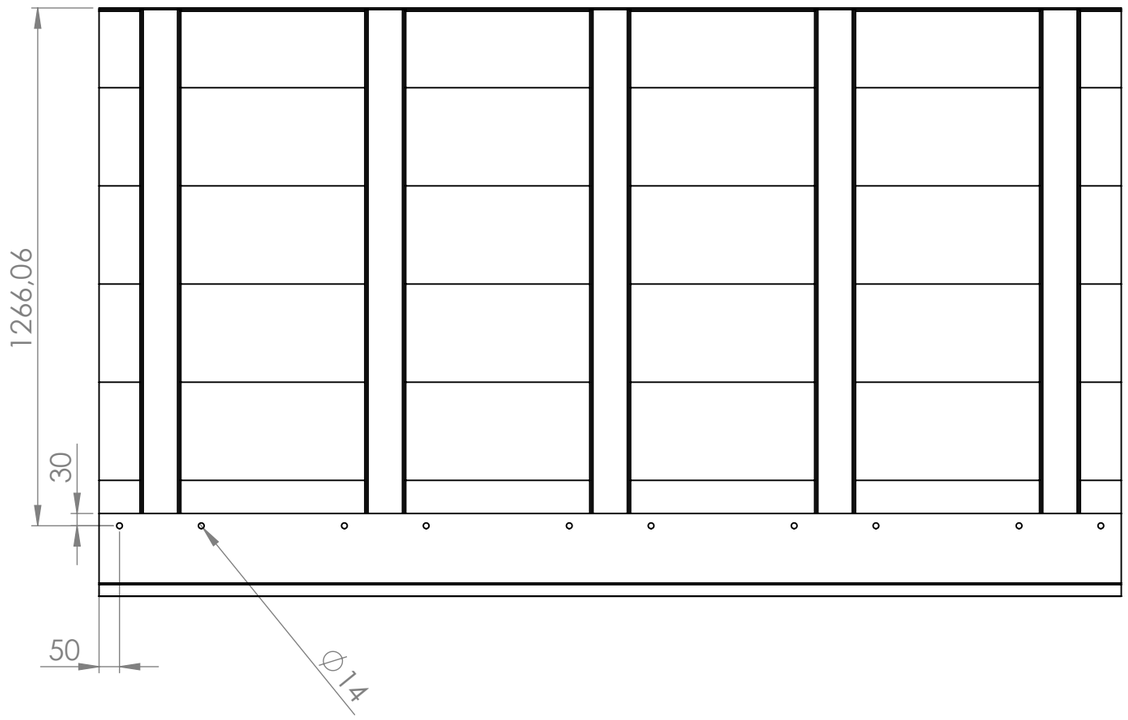

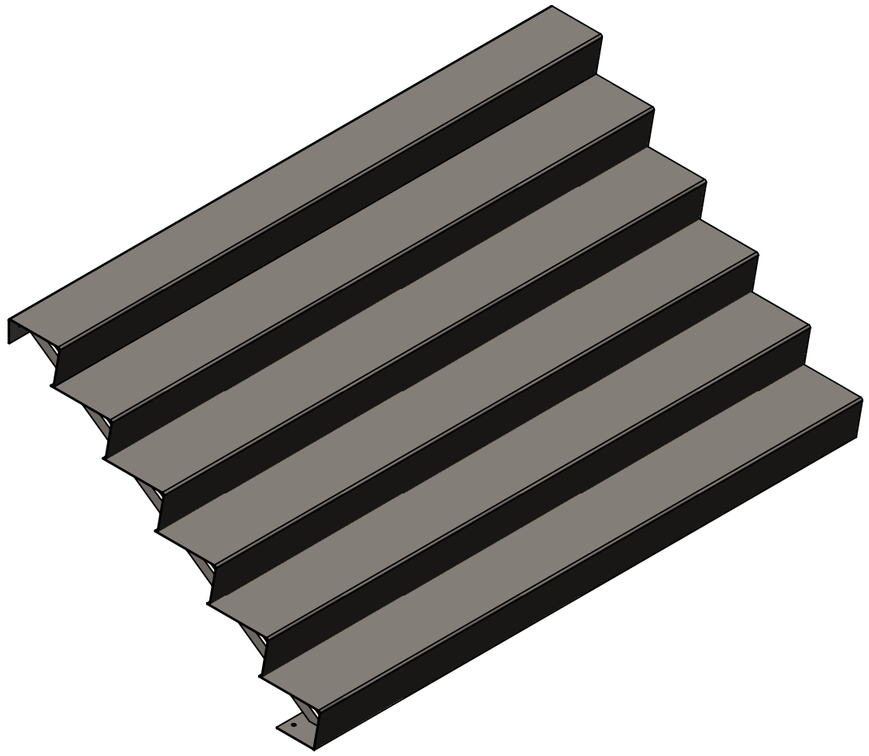

		DATE	
DRAWN	Luuk van den Heuvel	27-5-2022	
REVISION			

TITLE:

4mm Aluminum

ADEZZ®
WE PRODUCE GARDEN PRODUCTS FOR PROFESSIONALS

Liessentstraat 4, 5405 AG Uden (NL).
t 0031 (0)413 - 27 41 68.
e info@adezz.com, i www.adezz.com

Drawing. AST6.5

A3

Color: -

Mass (kg): **96.18**

SCALE:1:15

SHEET 1 OF 6